YASKAWA

YASKAWA AC Drive
L1000A

for Elevator Applications

200 V Class 1.5 to 110 kW
400 V Class 1.5 to 110 kW

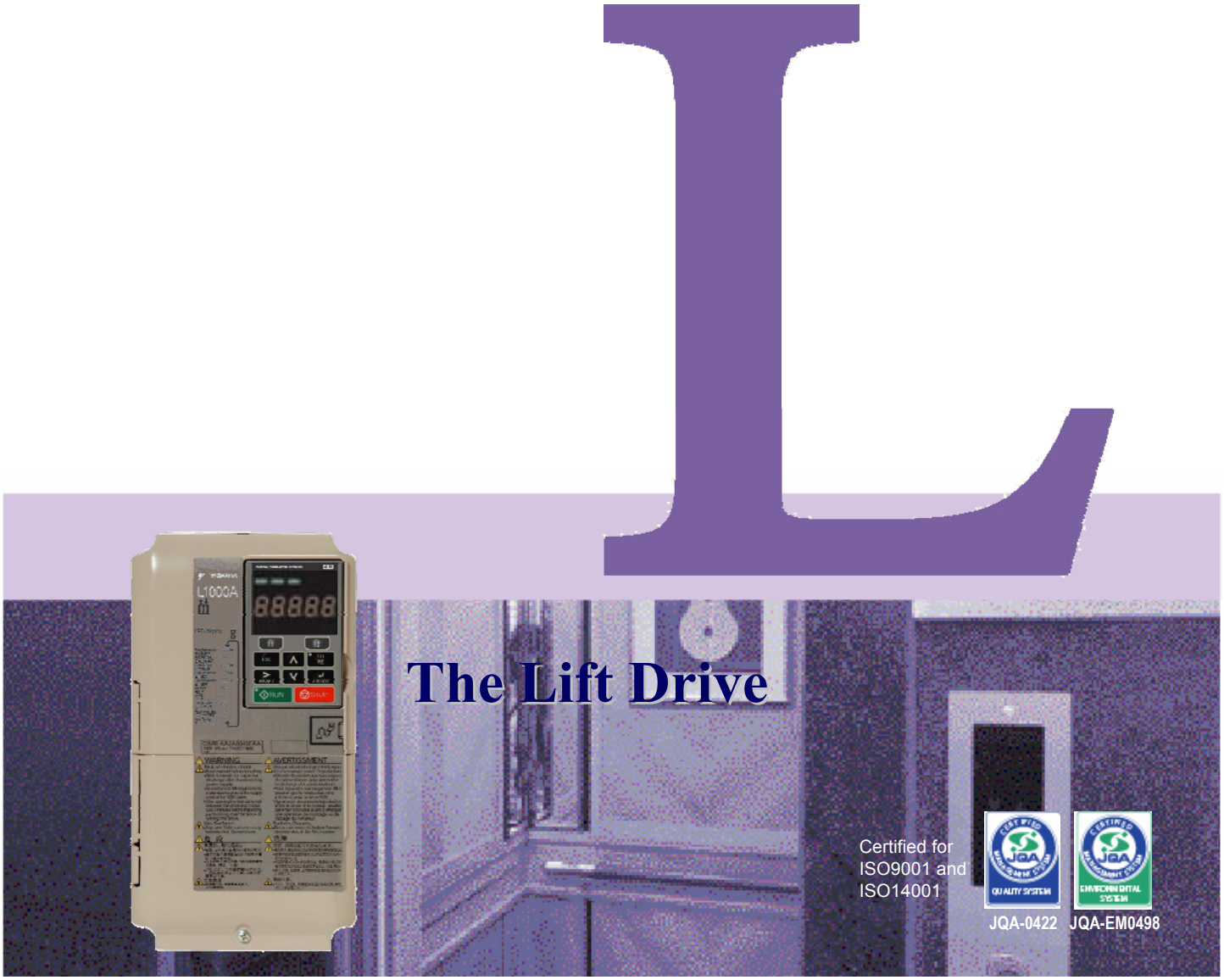

1. Matching Every Need

Runs Induction and Synchronous Motors

■Cutting-edge drive technology allows L1000 to run a newly installed gearless synchronous motor, or a refurbished geared induction motor. This minimizes equipment required for your application.

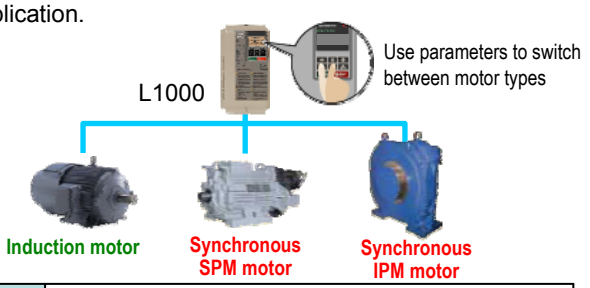

Capacity Range	200 V Class 1.5 to 110kW 400 V Class 1.5 to 110kW ∗ Some models not yet available.	
Control Mode	PM motors	・Closed Loop Vector Control for PM motors (SPM/IPM drive)
	Induction motors	・V/f Control ・Open Loop Vector Control ・Closed Loop Vector Control

Designed Compact for Tight Machine Rooms

■Easily fit into compact machine rooms by combining the world's smallest drive in its class with the light, efficient design of a PM motor.

■L1000's slender design can be installed into a slender control panel. Depth of 200 mm for models up to 18.5 kW, 300 mm for 22 kW to 75kW

■Take advantage of Side-by-Side installation* when storage space is limited. ∗ For models up to 18.5 kW.

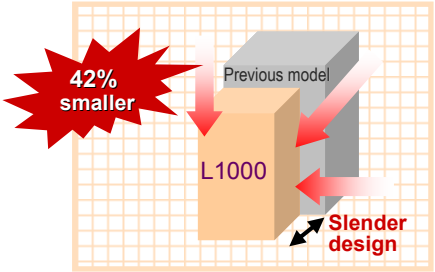

● Drive Dimension Comparison
Example shows a 400 V Class, 15 kW drive

Compatible with a Wide Range of Encoders

■High-performance current vector control generates powerful starting torque and allows precision control at low speeds.

■Interfaces to match gearless, SPM synchronous motors and every type of absolute encoder. High resolution and pole position detection for a smooth and safe ride.

Control Mode	Starting Torque	Speed Range	Motor Encoders and Option Cards
V/f Control	150% at 3 Hz*	1 : 40	N/A
Open Loop Vector Control	200% at 0.3 Hz*	1 : 200	N/A
Closed Loop Vector Control	200% at 0 r/min*1	1 : 1500	Incremental Encoders: - PG-X3 (Line Driver) - PG-B3 (Complementary)
Closed Loop Vector Control for PM	200% at 0 r/min*	1 : 1500	Incremental Encoders: - PG-X3 (Line Driver) - PG-B3 (Complementary) Absolute Encoders: - PG-F3 (ECN1313,HIPERFACE) - PG-E3 (HEIDENHAIN ERN1387)

∗ Drive and motor must be matched appropriately.

Reduced Operation Time and More Powerful Braking

Improved operation efficiency

■L1000 calculates the stopping distance to minimize operation time.
"Direct-to-Floor" function is also available.
These features improve operation efficiency as well as greater stopping precision.

■Short Floor minimizes the "creep speed" time for faster, more efficient operation.

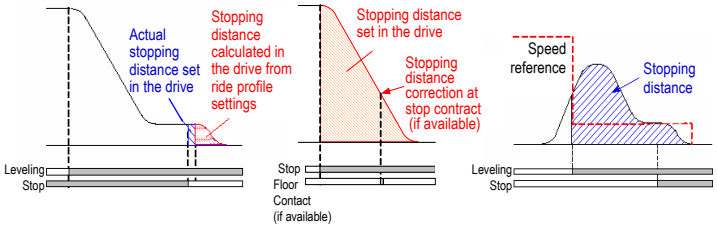

●Faster Operation Time ●Direct-to-Floor ●Short Floor

Loaded with Auto-Tuning Features

■L1000 is loaded with a variety of Auto-Tuning methods to ensure top performance.

■Rotational Auto-Tuning and Stationary Auto-Tuning are available for induction motors as well as synchronous motors.
Motor tuning features optimize drive settings without needing to disconnect the rope or car.

■Tuning features for connected machinery.

●Types of Auto-Tuning

Motor Tuning	
Rotational Auto-Tuning	Applications requiring high starting torque, high speed, and high accuracy. Tuning is performed on the motor alone, uncoupled from the load.
Stationary Auto-Tuning	Applications where the motor must remain connected to the load during the auto-tuning process.
Motor Resistance Auto-Tuning	For re-tuning when the cable length between the motor/drive has changed or when motor/drive capacities are different.
Encoder Offset Auto-Tuning	Fine tunes the home pulse position when using an encoder with a synchronous motor. Possible with both Rotational and Stationary Auto-Tuning.

Load Tuning	
Inertia Tuning	Optimizes deceleration time, Feed Forward, and functions (available soon)

■Brand new Auto-Tuning methods allow L1000 to continuously analyze changes in motor characteristics during run for highly precise speed control (when using Open Loop Vector Control)

2. Smooth, Comfortable Ride

Smooth Operation

■L1000 has ½ the torque ripple compared to our earlier models, for an even smoother ride.
■Designed specifically for elevator applications, L1000 provides precise motor torque performance capability for smoother acceleration and deceleration.

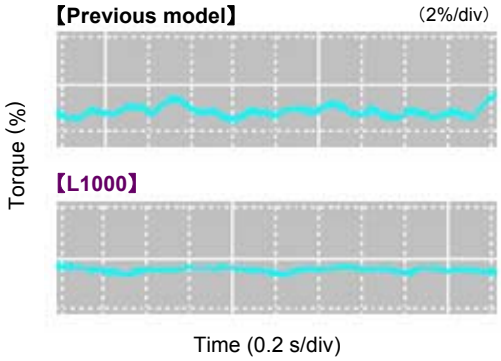

●Torque Ripple Comparison (Closed Loop Vector at zero speed)

Overshoot and Anti-Vibration Control

■Feed Forward achieves ideal speed response, eliminating vibration and overshoot, and makes it easy to tweak the speed control loop (ASR). (Available soon)
■Adjust jerk settings at the start and end of acceleration and deceleration to create a perfectly smooth ride.

●Feed Forward

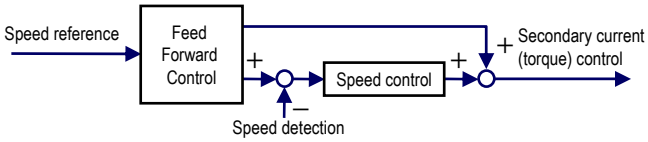

●Overshoot Compensation

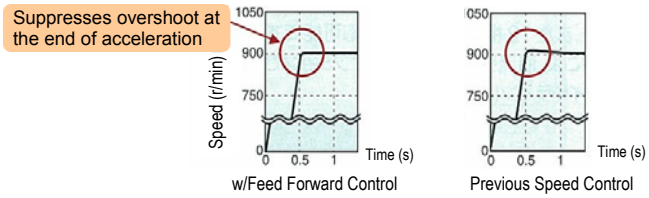

High Performance Starting Torque without Sensors

■Even without a load sensor, high-performance torque compensation (Advanced Anti-Rollback*) and high-resolution absolute encoder eliminate shock when the brake is released. Simplifying load sensor control signals makes cumbersome adjustments unnecessary.

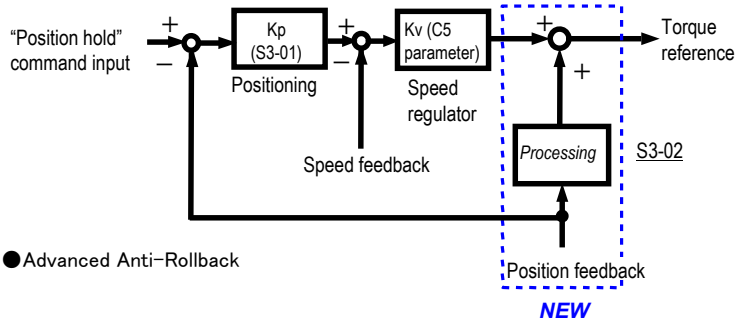

●Advanced Anti-Rollback

＊ Advanced Anti-Rollback: Torque compensation function that eliminates shock at start up by preventing the car from moving when the brake is released.

Zero servo gain 2 (S3-02)
(Before adjustment)

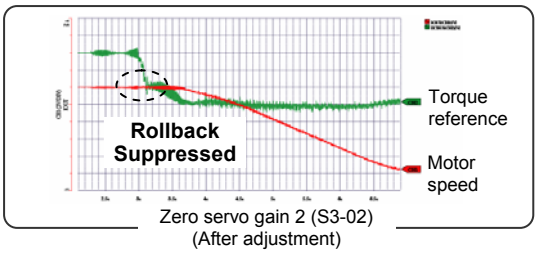

Zero servo gain 2 (S3-02)
(After adjustment)

■Anti-Rollback with sensors is easy to adjust, preventing shock start and stop.

Variety of Braking Functions

■All models up to 30 kW are equipped with a braking transistor for even more powerful braking options by just adding a braking resistor.

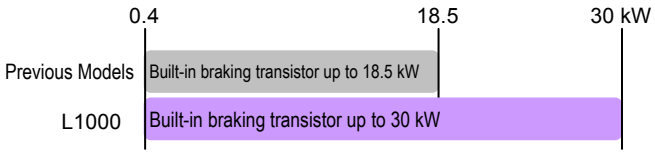

L1000A LINE UP

Motor Capacity	kW	1.5	2.2	3.7	5.5	7.5	11	15	18.5	22	30	37	45	55	75	90	110
200 V Class	Model CIMR-LT2A□□□	0008	0011	0018	0025	0033	0047	0060	0075	0085	0115	0145	0180	0215	0283	0346	0415
400 V Class	Model CIMR-LT4A□□□	0005	0006	0009	0015	0018	0024	0031	0039	0045	0060	0075	0091	0112	0150	0180	0216

Available soon

3. Safety

Rescue Operation

Rescue Operation switches to backup battery or UPS in case of a power outage

■Both single-phase and 3-phase 220 V UPS and 48-96 Vdc battery (24 V control power supply) can keep the elevator running in case of an emergency. Possible with all 200 V and 40 V class models (400 V class requires a 400 V class UPS)

■L1000 automatically adjusts speed if a voltage drop occurs to prevent loss in motor speed.

■Light Load Direction Search function triggered by UPS and battery voltage is provided.

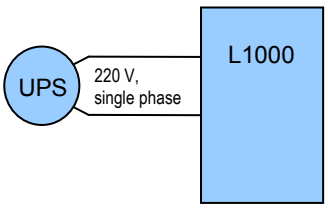

●UPS Wiring and Operation

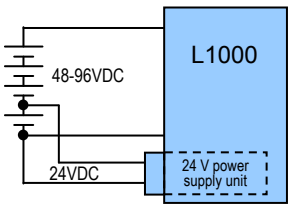

●Backup Battery Wiring and Operation

∗ The illustrations above have been simplified, omitting switches and control signals that are otherwise required. Refer to the wiring diagrams included with the components in question.

Safe Disable Function

Protect the elevator application with immediate fault detection.

■L1000 protects the entire elevator application by detecting overacceleration, speed reversal, wiring errors, and improper parameter settings.
Hardware sensors respond immediately if the motor encoder signal is lost, ensuring an even higher level of safety.

●Overacceleration Fault Detection

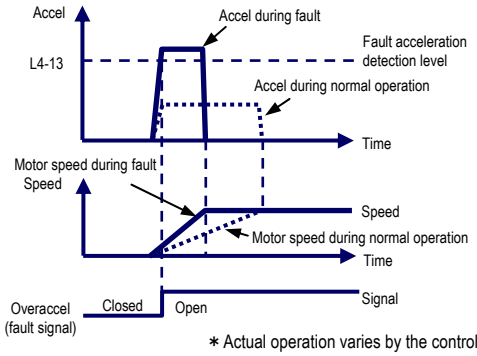

∗ Actual operation varies by the control mode and motor encoder.

Safe Disable Function

Safety regulations

■Fully compliant with EN954-1 Cat. 3, ISO13849-1 (Cat. 3, PLd), and IEC/EN61058 SIL2, while eliminating the need for extra peripherals. Helps to easily satisfy EU standard for elevators EN81-1.

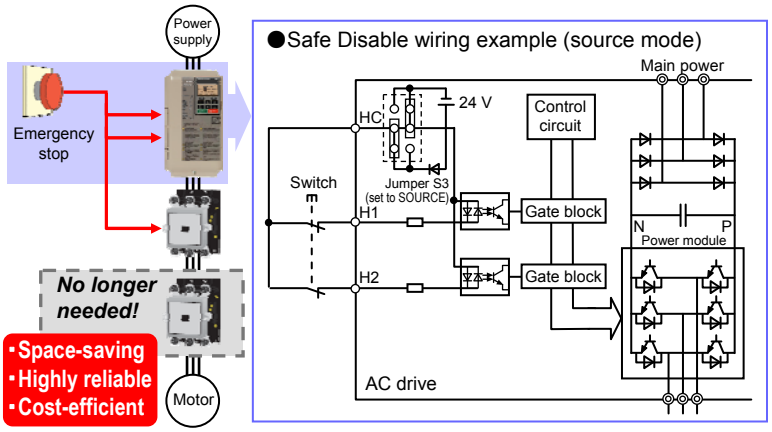

Monitor status of input power supply

■Customized hardware immediately detects phase loss from the input power supply.
Detection remains active regardless of whether the drive is running or stopped.
An output signal can also be setup if a phase loss occurs.

Preventative Warnings

Performance Life Monitors

■L1000 is equipped with performance life monitors that notify the user of part wear and maintenance periods to prevent problems before they occur.

●Alarm Signals Output PLC or Control Device

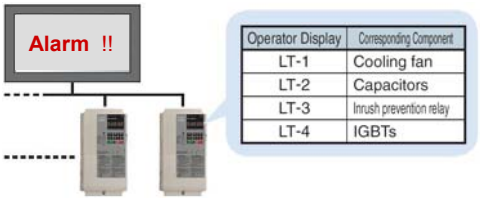

Operator Display	Corresponding Component
LT-1	Cooling fan
LT-2	Capacitors
LT-3	Inrush prevention relay
LT-4	IGBTs

Long-Life Performance

Ten Years of Durable Performance

■Cooling fan, capacitors, relays, and IGBTs have been carefully selected and designed for a life expectancy up to ten years*.

∗ Assumes the drive is running continuously for 24 hours a day, 60 s/cycle, at 80% load, and an ambient temperature of 40ºC.

4. Environmental

High Efficiency: Energy Saving

■Superior efficiency and control with an IPM motor and Yaskawa's Energy Saving function
Achieve even greater efficiency with a IPM motor and L1000's optimized control functions.

■Re-use regenerative power by adding a regenerative unit (VARISPEED-656RC5)
Combining L1000 with VARISPEED-656RC5 to send regenerative power back to the power supply.

■L1000 is incredibly efficient– approximately 97%.
Save even more energy by using the cooling fan ON/OFF control function when the cooling fan is not needed.

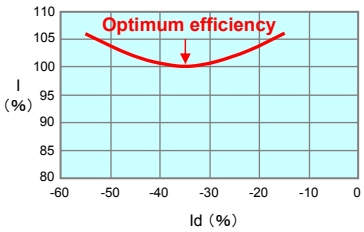

●Maximizing Control Efficiency with an IPM Motor (minimizing output current (I) during operation)

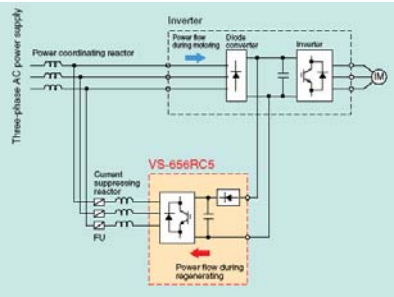

●Regenerative Power Supply with RC5 (re-using regenerative energy)

High Performance: Low Harmonic Distortion

■Built-in DC reactor suppresses harmonic distortion to keep the input power factor above 90%.
∗Models 18.5 kW and below offer a built-in DC reactor as an option.

●Input Current Waveform

No reactor

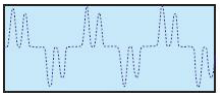

Waveform distortion 88%

DC reactor

Waveform distortion 40%

■Yaskawa also offers 12-pulse and 18-pulse rectifier options*, as well as filters to minimize harmonic distortion.
∗Available soon. Requires a separate 3-winding or 4-winding transformer.

RoHS

■All standard products are fully compliant with the EU's RoHS directive.

RoHS compliant

5. Easy Setup and Maintenance

Terminal Block with Parameter Backup

The Drive Industry's First Terminal Board with a Parameter Backup Function

■The terminal block's ability to save parameter setting data makes it a breeze to get the application back online in the event of a failure requiring drive replacement.

●L1000A Terminal Block

Parameter

Name	Number	Setting
ND/HD	C6-01	1
Control Mode	A1-02	0
Frequency Reference Selection	b1-01	1
Run Command Selection	b1-02	1
⋮	⋮	⋮

DriveWizard Plus

Engineering Tool DriveWizard Plus

■Manage the unique settings for all your drives with a personal computer (PC).

■An indispensable tool for drive setup and maintenance. Edit parameters, access all monitors, create customized operation sequences, and observe drive performance with the oscilloscope function.

■The Drive Replacement feature in DriveWizard Plus saves valuable time during equipment replacement and application upgrades by automatically programming parameters for full compatibility.

■Equipped with a USB port for easy connection to a personal computer.

●Connecting L1000 and a PC with USB

Note: Users can also use the WV103 cable included with earlier Yaskawa models. Simply remove the operator keypad to access the comm. port.

Easy Setup

Quick setup and easy maintenance

■ Set speed, acceleration, and jerk parameters in elevator units.

■ All models come standard with an LED unit equipped with a Copy function that lets the user quickly upload and download parameter settings.

■ LCD operator keypad option available

■ USB Copy Unit is available to copy parameter settings and program multiple drives instantly.

■ The Setup Mode gives the user access to just those parameters needed to get the drive up and running right away.

■ The Verify Function lets the user check parameters that may have been changed from their default values.

● LED Operator (standard)

●LCD Operator (optional)

●USB Copy Unit (optional)

●Verify Function

List of parameters that have been changed from their default settings.

Parameter Name	No.	Default	Set value
Speed reference selection	b1-01	1	0
Acceleration time	C1-01	3.00s	3.50s
Deceleration time	C1-02	3.00s	3.50s
⋮	⋮	⋮	⋮

Standard Specifications

200 V Class

Note: Models below 2.2 kW and above 55 kW are awaiting release

Item			Specifications									
Model CIMR-LT2A□□□□□□□□			0018	0025	0033	0047	0060	0075	0085	0115	0145	0180
Max. Applicable Motor Capacity*1		kW	3.7	5.5	7.5	11	15	18.5	22	30	37	45
Input	Rated Input Current*2	A	18.9	28	37	52	68	80	82	111	136	164
Output	Rated Output Capacity*3	kVA	6.7	9.5	12.6	17.9	23	29	32	44	55	69
	Rated Output Current	A	17.5*4	25*4	33*4	47*4	60*4	75*4	85*4	115*4	145*5	180*5
	Overload Tolerance		150% of rated output current for 60 s									
	Carrier Frequency		User adjustable from 2 to 15 kHz								User adjustable from 2 to 10 kHz	
	Max. Output Voltage		Three-phase 200 to 240 V (proportional to input voltage)									
	Max. Output Frequency		120 Hz (user adjustable)									
Power	Rated Voltage/Rated Frequency		Three-phase 200 to 240 Vac 50/60 Hz 270 to 340 Vdc									
	Allowable Voltage Fluctuation		-15 to 10%									
	Allowable Frequency Fluctuation		±5%									
	Power Supply	kVA	9.5	14	18	27	36	44	37	51	62	75
Harmonics Suppression	DC Reactor		Option						Built-in			
Braking Function	Braking Resistor		Built-in								Option	

∗1: The motor capacity (kW) refers to a Yaskawa 4-pole induction motor (200 V, 60 Hz). The rated output current of the drive output amps should be equal to or greater than the motor rated current.
∗2: Value displayed is for when operating at the rated output current. This value may fluctuate based on the power supply side impedance, as well as the input current, power supply transformer, input side reactor, and wiring conditions.
∗3: Rated output capacity is calculated with a rated output voltage of 220 V.
∗4: Carrier frequency is set to 8 kHz. Current derating is required in order to raise the carrier frequency.
∗5: Carrier frequency is set to 5 kHz. Current derating is required in order to raise the carrier frequency.

400 V Class

Note: Models below 2.2 kW and above 90 kW are awaiting release

Item			Specifications											
Model CIMR-LT4A□□□□□□□□			0009	0015	0018	0024	0031	0039	0045	0060	0075	0091	0112	0150
Max. Applicable Motor Capacity*1		kW	3.7	5.5	7.5	11	15	18.5	22	30	37	45	55	75
Input	Rated Input Current*2	A	10.4	15	20	29	39	44	43	58	71	86	105	142
Output	Rated Output Capacity*3	kVA	7	11.3	13.7	18.3	24	30	34	48	57	69	85	114
	Rated Output Current	A	9.2*4	14.8*4	18*4	24*4	31*4	39*4	45*4	60*4	75*4	91*4	112*5	150*5
	Overload Tolerance		150% of rated output current for 60 s											
	Carrier Frequency		User adjustable from 2 to 15 kHz										User adjustable from 2 to 10 kHz	
	Max. Output Voltage		Three-phase 380 to 480 V (proportional to input voltage)											
	Max. Output Frequency		120 Hz (user adjustable)											
Power	Rated Voltage/Rated Frequency		Three-phase 380 to 480 Vac 50/60 Hz 510 to 680 Vdc											
	Allowable Voltage Fluctuation		-15 to 10%											
	Allowable Frequency Fluctuation		±5%											
	Power Supply	kVA	10.0	14.6	19.2	28.4	37.5	46.6	39.3	53.0	64.9	78.6	96.0	129.9
Harmonics Suppression	DC Reactor		Option						Built-in					
Braking Function	Braking Resistor		Built-in								Option			

∗1: The motor capacity (kW) refers to a Yaskawa 4-pole induction motor (400 V, 60 Hz). The rated output current of the drive output amps should be equal to or greater than the motor rated current.
∗2: Value displayed is for when operating at the rated output current. This value may fluctuate based on the power supply side impedance, as well as the input current, power supply transformer, input side reactor, and wiring conditions.
∗3: Rated output capacity is calculated with a rated output voltage of 440 V.
∗4: Carrier frequency is set to 8 kHz. Current derating is required in order to raise the carrier frequency.
∗5: Carrier frequency is set to 5 kHz. Current derating is required in order to raise the carrier frequency.

Common Specifications

Note: Specifications regarding Open Loop Vector Control capabilities require Rotational Auto-Tuning.
L1000 must be used in acceptable environmental conditions to ensure the expected performance life of all drive components.

Item		Specification
Control Characteristics	Control Method	Use drive parameters to select from the following control modes: V/f Control, Open Loop Vector Control, Closed Loop Vector Control, Closed Loop Vector Control for PM
	Frequency Control Range	0.01 to 120 Hz
	Frequency Accuracy (Temperature Fluctuation)	Digital reference: within ±0.01% of the max. output frequency (-10 to +40℃) Analog reference: within ±0.1% of the max. output frequency (25℃±10℃)
	Frequency Setting Resolution	Digital reference: 0.01 Hz Analog reference: 0.03 Hz / 60 Hz (11 bit)
	Output Frequency Resolution	0.001 Hz
	Frequency Setting Resolution	-10 to 10 V, 0 to 10 V
	Starting Torque	150% / 3 Hz (V/f Control) 200% / 0 r/min (Closed Loop Vector Control) 200% / 0.3 Hz (Open Loop Vector Control) 200% / 0 r/min (Closed Loop Vector Control for PM)
	Speed Control Range	1:40 (V/f Control) 1:1500 (Closed Loop Vector Control) 1:200 (Open Loop Vector Control) 1:1500 (Closed Loop Vector Control for PM)
	Speed Control Accuracy	±0.2% in Open Loop Vector Control (25℃±10℃)*1, ±0.02% in Closed Loop Vector Control (25℃±10℃)
	Speed Response	10 Hz in Open Loop Vector Control (25℃±10℃), 50 Hz in Closed Loop Vector Control (25℃±10℃) (excludes temperature fluctuation when performing Rotational Auto-Tuning)
	Torque Limit	All vector control modes allow separate settings in four quadrants
	Torque Accuracy	±5%
	Accel/Decel Time	0.00 to 6000.0 s (4 selectable combinations of independent acceleration and deceleration settings)
	Braking Torque	Approximately 125% when using a braking resistor option
	V/f Characteristics	User-selected programs and V/f preset patterns possible
	Main Control Functions	Torque compensation at start (with or without sensors), Auto-Tuning (for motor and encoder offset), braking sequence, Feed Forward, Short Floor, Rescue Operation using back-up power supply, Light Load Direction Search, Removable Terminal Block with Parameter Backup...
Protection Functions	Motor Protection	Thermistor
	Momentary Overcurrent Protection	Drive stops when output current exceeds 200% of rated output current
	Overload Protection	Drive stops after 60 s at 150% of rated output current *2
	Overvoltage Protection	200 V class: Stops when DC bus exceeds approx. 410 V 400 V class: Stops when DC bus exceeds approx. 820 V
	Undervoltage Protection	200 V class: Stops when DC bus exceeds approx. 190 V 400 V class: Stops when DC bus exceeds approx. 380 V
	Heatsink Overheat Protection	Thermistor
	Stall Prevention	Stall prevention during acceleration
	Ground Fault Protection	Protection by electronic circuit*3
	Charge LED	Charge LED remains lit until DC bus has fallen below approx. 50 V
Environment	Area of Use	Indoors
	Ambient Temperature	-10 to 40℃ (open-chassis), -10 to 50℃ (NEMA Type 1)
	Humidity	95% RH or less (no condensation)
	Storage Temperature	-20 to 60℃ (short-term temperature during transportation)
	Altitude	Up to 1000 meters
	Shock	10 Hz to 20 Hz, 9.8 m/s^2 max. 20 Hz to 55 Hz, 5.9 m/s^2 max.
Standards Compliant		UL508C, EN61800-3, EN61800-5-1, EN954-1 Cat. 3, ISO13849-1 (Cat. 3, PLd), IEC/EN61508 SIL2
Protective Design		IP00 open-chassis, NEMA Type 1 enclosure*4

∗1: Speed control accuracy may vary slightly depending on installation conditions or motor used. Contact Yaskawa for details.
∗2: Overload protection may be triggered when operating for 60 s with 150% of the rated output current if the output frequency is less than 6 Hz.
∗3: Protection may not be provided under the following conditions as the motor windings are grounded internally during run:
・Low resistance to ground from the motor cable or terminal block.
・Drive already has a short-circuit when the power is turned on.
∗4: Removing the cover from a NEMA Type 1 model drive (models CIMR-LT2A0018 to 2A0075, CIMR-LT4A0009 to 4A0039) converts the enclosure rating to IP20.

Dimensions

■ Enclosure Panel (NEMA Type 1)

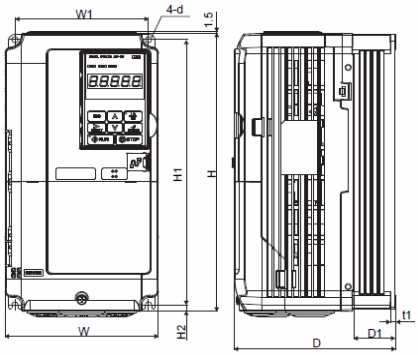

Figure 1

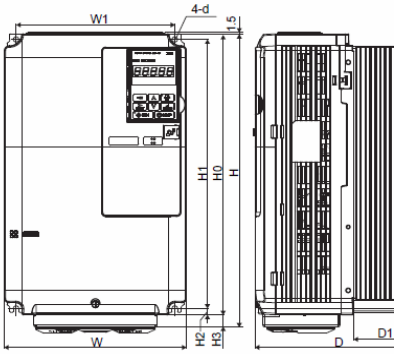

Figure 2

	Applicable Motor (kW)	Model CIMR-LT2A□□□□	Figure	Dimensions (mm)											Weight (kg)
				W	H	D	W1	H1	H0	H2	H3	D1	t1	d	
200 V Class	3.7	0018	1	140	260	164	122	248	—	6	—	55	5	M5	3.5
	5.5	0025		140	260	167	122	248	—	6	—	55	5	M5	4.0
	7.5	0033		140	260	167	122	248	—	6	—	55	5	M5	4.0
	11	0047		180	300	187	160	284	—	8	—	75	5	M5	5.6
	15	0060		220	350	197	192	335	—	8	—	78	5	M6	8.7
	18.5	0075	2	220	365	197	192	335	350	8	15	78	5	M6	9.7

	Applicable Motor (kW)	Model CIMR-LT4A□□□□	Figure	Dimensions (mm)											Weight (kg)
				W	H	D	W1	H1	H0	H2	H3	D1	t1	d	
400 V Class	3.7	0009	1	140	260	164	122	248	—	6	—	55	5	M5	3.5
	5.5	0015		140	260	167	122	248	—	6	—	55	5	M5	3.9
	7.5	0018		140	260	167	122	248	—	6	—	55	5	M5	3.9
	11	0024		180	300	167	160	284	—	8	—	55	5	M5	5.4
	15	0031		180	300	187	160	284	—	8	—	75	5	M5	5.7
	18.5	0039	2	220	350	197	192	335	—	8	—	78	5	M6	8.3

■ Open-Chassis (IP00)

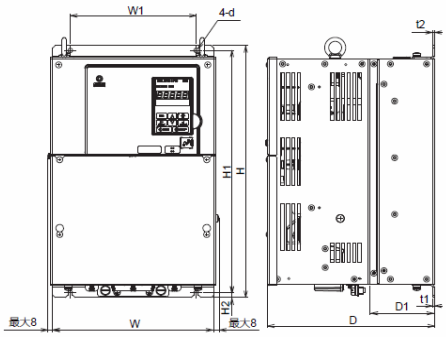

Figure 1

	Applicable Motor (kW)	Model CIMR-LT2A□□□□	Figure	Dimensions (mm)										Weight (kg)
				W	H	D	W1	H1	H2	D1	t1	t2	d	
200 V Class	22	0085	1	250	400	258	195	385	7.5	100	2.3	2.3	M6	21
	30	0115		275	450	258	220	435	7.5	100	2.3	2.3	M6	25
	37	0145		325	550	283	260	535	7.5	110	2.3	2.3	M6	37
	45	0180		325	550	283	260	535	7.5	110	2.3	2.3	M6	38

	Applicable Motor (kW)	Model CIMR-LT4A□□□□	Figure	Dimensions (mm)										Weight (kg)
				W	H	D	W1	H1	H2	D1	t1	t2	d	
400 V Class	22	0045	1	250	400	258	195	385	7.5	100	2.3	2.3	M6	21
	30	0060		275	450	258	220	435	7.5	100	2.3	2.3	M6	25
	37	0075		325	510	258	260	495	7.5	105	2.3	3.2	M6	36
	45	0091		325	510	258	260	495	7.5	105	2.3	3.2	M6	36
	55	0112		325	550	283	260	535	7.5	110	2.3	2.3	M6	41
	75	0150		325	550	283	260	535	7.5	110	2.3	2.3	M6	42

Watt Loss and Drive Derating

Watt Loss Data

	Applicable Motor (kW)	Model CIMR-LT2A□□□□	Carrier Frequency 8 kHz			
			Rated Amps (A)	Heatsink Loss (W)	Interior Unit Loss (W)	Total Loss (W)
200 V Class	3.7	0018	17.5	100.7	67.4	168.1
	5.5	0025	25.0	194.4	92.3	286.6
	7.5	0033	33.0	213.8	104.8	318.7
	11	0047	47.0	280.2	129.9	410.2
	15	0060	60.0	394.9	162.8	557.7
	18.5	0075	75.0	459.8	220.9	680.7
	22	0085	85.0	510.3	210.9	721.2
	30	0115	115.0	662.4	250.0	912.4
	37	0145	145.0 *	815.9 *	306.3 *	1122.2 *
	45	0180	180.0 *	976.0 *	378.1 *	1354.1 *

	Applicable Motor (kW)	Model CIMR-LT4A□□□□	Carrier Frequency 8 kHz			
			Rated Amps (A)	Heatsink Loss (W)	Interior Unit Loss (W)	Total Loss (W)
400 V Class	3.7	0009	9.2	68.5	61.0	129.5
	5.5	0015	14.8	135.4	85.7	221.1
	7.5	0018	18.0	149.9	97.0	246.9
	11	0024	24.0	208.0	115.1	323.2
	15	0031	31.0	262.6	140.8	403.4
	18.5	0039	39.0	329.8	179.4	509.2
	22	0045	45.0	348.5	169.6	518.1
	30	0060	60.0	484.1	217.2	701.3
	37	0075	75.0	563.4	254.0	817.4
	45	0091	91.0	722.6	299.0	1021.7
	55	0112	112.0 *	908.2 *	416.4 *	1324.6 *
	75	0150	150.0 *	1340.3 *	580.1 *	1920.3 *

∗ These values assume the carrier frequency is set to 5 Hz.

Derating

The drive can be operated at above the rated temperature, altitude, and default carrier frequency by derating the drive capacity.A drive with a rated output current of 10 A can be derated to having an output current of 8 A, thus allowing the drive to operate continuously at a higher temperature.

Derating as the carrier frequency

As the carrier frequency of the drive is increased above the default setting, the drive's rated output current must be derated according to Figure 1 to Figure 4.

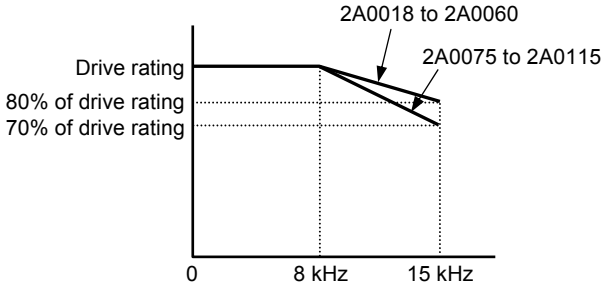

Figure 1. CIMR-LT2A0018 to 2A0115

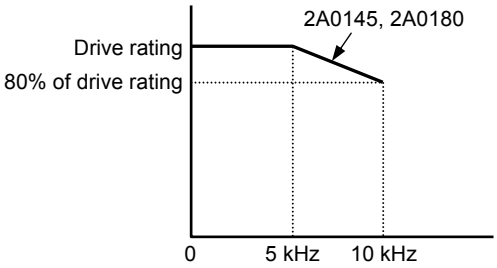

Figure 2. CIMR-LT2A0145, 2A0180

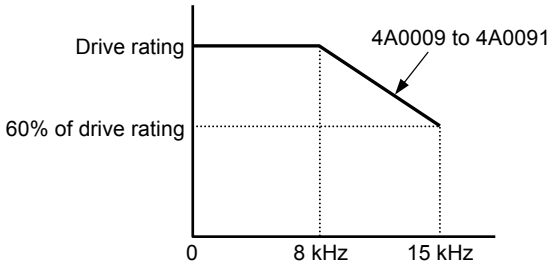

Figure 3. CIMR-LT4A0009 to 4A0091

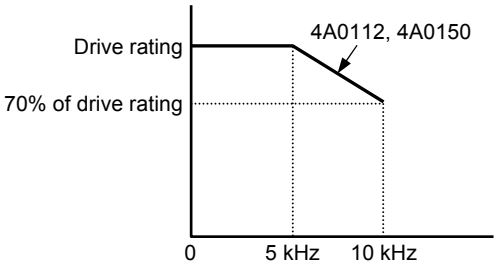

Figure 4. CIMR-LT4A0112, 4A0150

Standard Connection Diagram

■ CIMR-LT2A0033: 200 V Class 7.5 kW

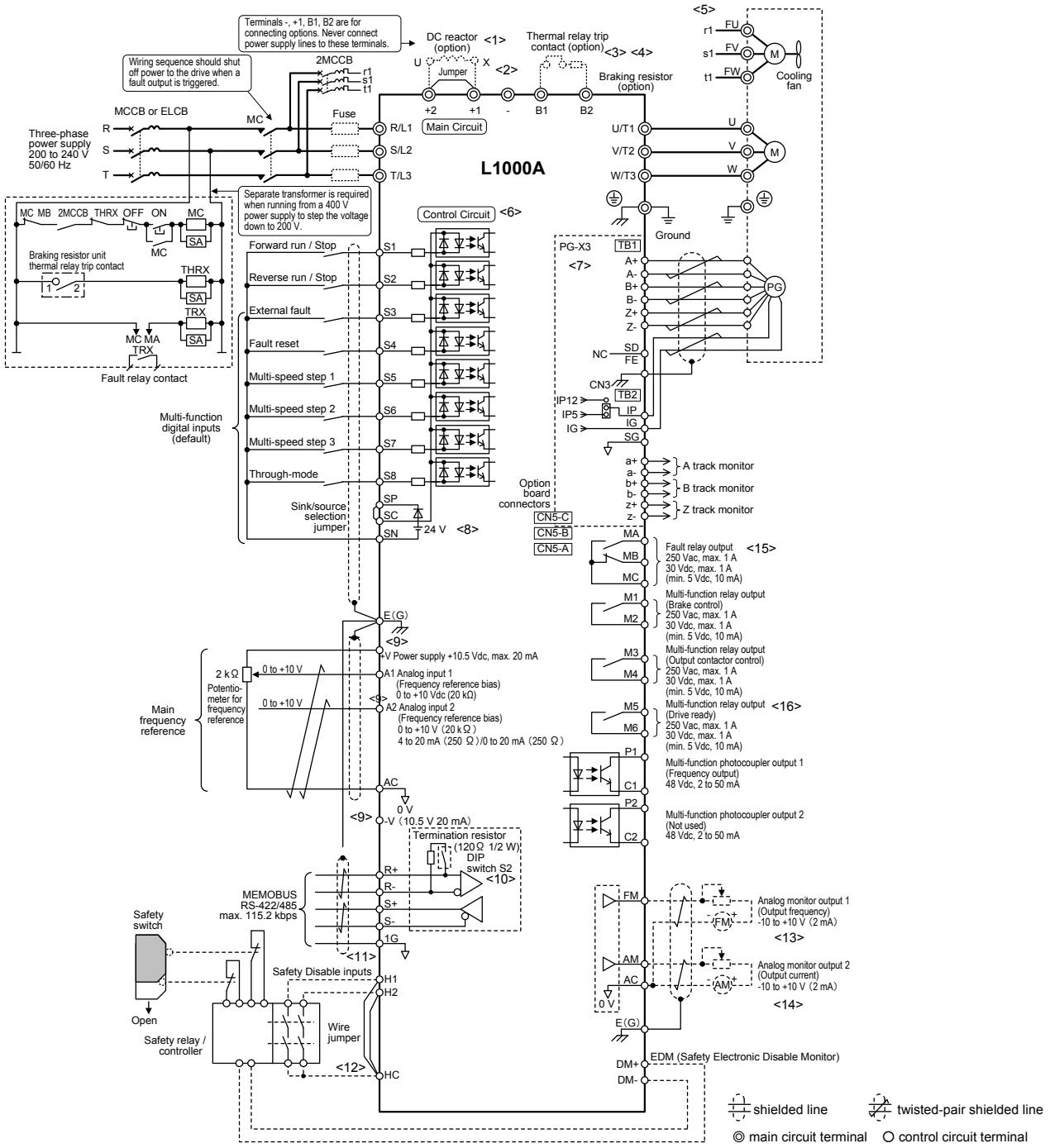

<1> Remove the jumper between terminals +1 and +2 when installing a DC reactor option.
<2> Models CIMR-LT2A0085 to 2A0180 and 4A0045 to 4A0150 come with a built-in DC reactor.
<3> Disable protection for built-in braking transistor (L8-55 = 1) when using a regenerative converter, regenerative unit, or braking unit (and therefore not using the built-in braking transistor).
<4> Drives using a braking resistor unit should wire a thermal relay so that the power supply is also shut off if overheat occurs.
<5> Self-cooling motors do not require wiring that would be necessary with motors using a cooling fan.
<6> A separate 24 V power supply is required to have the control circuit still operating while the power to the main circuit is shut off.
<7> For control modes that do not use a motor speed feedback signal, PG option card wiring is not necessary.
<8> Place jumpers to set the drive for sink or source (internal or external power supply). The default setting is for sink (internal power supply).
<9> The maximum output current capacity for the +V and —V terminals on the control circuit is 20 mA. Never short terminals +V, —V, and AC, as this can cause erroneous operation or damage the drive.
<10> Enable the termination resistor in the last drive in a MEMOBUS/Modbus network by setting DIP switch S2 to the ON position.
<11> The sink/source setting for the Safe Disable input is the same as with the sequence input. Jumper S3 has the drive set for an external power supply. When not using the Safe Disable input feature, remove the jumper shorting the input and connect an external power supply.
<12> Disconnect the wire jumper between HC - H1 and HC - H2 when utilizing the Safe Disable input.
<13> Monitor outputs work with devices such as analog frequency meters, ammeters, voltmeters, and wattmeters. Do not use these outputs in a feedback loop.
<14> Note that if the drive is set to trigger a fault output whenever the fault restart function is activated (L5-02 = 1), then a sequence to interrupt power when a fault occurs will result in shutting off the power to the drive as the drive attempts to restart itself. The default setting for L5-02 is 0 (fault output active during restart attempt).
<15> MA, MB, and MC must be used as fault outputs. They must be set up so that any interruption in the safety chain shuts off drive output.
<16> Even though no fault is present conditions where the drive can not start can occur, e.g., when the digital operator is left in the Programming Mode. Use the "Drive Ready" output (default set to terminals M5-M6) to interlock operation in such situations.

L1000 and Yaskawa PM Motors *Flat-type and base-mount motors*

	Weight (Kg)	Elevator Speed (m/min)	Motor			L1000
			Model SSE4-□	Motor Output (kW)	Motor Speed (r/min)	CIMR-LT□
200 V Class	450	45	22P1072	2.1	72	2A0025
		60	22P8096	2.8	96	2A0025
		90	24P2144	4.2	144	2A0033
	600	45	22P8072	2.8	72	2A0033
		60	23P7096	3.7	96	2A0033
		90	25P6144	5.6	144	2A0047
		105	26P5168	6.5	168	2A0047
	750	45	23P5072	3.5	72	2A0033
		60	24P6096	4.6	96	2A0033
		90	26P9144	6.9	144	2A0060
		105	28P1168	8.1	168	2A0060
	900	45	24P2072	4.2	72	2A0047
		60	25P6096	5.6	96	2A0047
		90	28P3144	8.3	144	2A0060
		105	29P7168	9.7	168	2A0060
	1000	45	24P6072	4.6	72	2A0047
		60	26P2096	6.2	96	2A0047
		90	29P2144	9.2	144	2A0075
		105	2011168	11	168	2A0075
400 V Class	450	45	42P1072	2.1	72	4A0015
		60	42P8096	2.8	96	4A0015
		90	44P2144	4.2	144	4A0018
		105	44P8168	4.8	168	4A0018
	600	45	42P8072	2.8	72	4A0018
		60	43P7096	3.7	96	4A0018
		90	45P6144	5.6	144	4A0024
		105	46P5168	6.5	168	4A0024
	690	45	43P2072	3.2	72	4A0018
		60	44P3096	4.3	96	4A0018
		90	46P9144	6.9	144	4A0031
		105	48P1168	8.1	168	4A0031
	750	45	43P2072	3.5	72	4A0018
		60	44P3096	4.6	96	4A0018
		90	46P9144	6.9	144	4A0031
		105	48P1168	8.1	168	4A0031
	900	45	44P2072	4.2	72	4A0018
		60	45P6096	5.6	96	4A0018
		90	48P3144	8.3	144	4A0031
		105	49P7168	9.7	168	4A0031
	1000	45	44P6072	4.6	72	4A0024
		60	46P2096	6.2	96	4A0024
		90	49P2144	9.2	144	4A0031
		105	4011168	11	168	4A0031
		120	4013192	13	192	4A0039

Model Number Key

CIMR- L T 2 A 0018 A A A

- CIMR- : Drive
- L : L1000 Series
- T : Region
- 2 : Voltage Class
- A : Customized Specifications
- 0018 : Current Class
- A : Enclosure Type
- A : Environmental Specifications
- A : Design Revision Order

No.	Region
T	Asia
A	Japan

No.	Voltage Class
2	3-phase, 200 V
4	3-phase, 400 V

No.	Customized Specifications
A	Standard model

No.	Current Class
See chart above.	

No.	Enclosure Type
A	IP00
F	NEMA Type 1

No.	Environmental Specifications
A	Standard

Peripherals Devices and Options

Device		Model	Purpose	
Interface Options				
Operator Extension Cable		WV001/WV003	Cable for connecting the LED operator (1 m or 3 m cables available) RJ-45 8 pin UTP CAT5e cable (T568B)	
USB Copy Unit		JVOP-181	Copy parameter settings in a single step, then transfer those settings to another drive. Cable included. Contact a Yaskawa representative to obtain a USB driver.	
Operator Mounting Bracket				
Installation Support Set A		EZZ020642A	Mounts the digital operator to the outside of an enclosure panel. For use with holes through the panel.	
Installation Support Set B		EZZ020642B	Mounts the digital operator to the outside of an enclosure panel. For use with mounted threaded studs.	
Other Options				
24 V Power Supply		PS-A10L PS-A10H	Back power supply for the control circuit and option boards for when the main circuit loses power. Allows the user to refer to parameter settings and view drive monitors during a power loss.	
Option Cards				
PG Speed Controller Card	Complimentary Type PG	PG-B3	Pulse generators and encoders are combined with a feedback signal to detect motor speed. Allows the drive to control the output frequency to keep motor speed constant.	For complimentary and open collector types: 3 track (A, B, Z pulse) Single track compatible (A pulse) Maximum input frequency: 50 kHz Pulse monitor output: Open collector Voltage output for PG: 12 V, max. 200 mA
	Line Driver PG	PG-X3		For line drivers: 3 track (A, B, Z pulse) Single track compatible (A pulse) Maximum input frequency: 300 kHz Pulse monitor: Matches RS-422 Voltage output for PG: 5 or 12 V, max. 200 mA
	Encoder Type (EnDat)	PG-F3		For HEIDENHAIN EnDat2.1/01, EnDat2.2/01: Maximum input frequency: 20 kHz Pulse monitor: Matches RS-422 Voltage output for encoder: 5 V, 330 mA max or 8 V, 150 mA max. Encoder cable: 20 m max. Pulse monitor cable: 30 m max.
	Encoder Type (ERN1387)	PG-E3		For HEIDENHAIN ERN1387: Maximum input frequency: 20 kHz Pulse monitor: Matches RS-422 Voltage output for encoder: 5 V, 200 mA max. Encoder cable: 10 m max. Pulse monitor cable: 30 m max.
I/O Option Cards	Analog Monitor	AO-A3	Outputs analog signal for monitoring drive output state (output frequency, output current, etc.). Terminals: 2 analog outputs Output resolution: 11 bit signed (1/2048) Output voltage: −10 to +10 Vdc	
	Digital Input	DI-A3	Allows for a digital speed reference input. Terminals: 18 input terminals (including those for set and sign) Input signal: User-set binary 8/12/16 bit, BCD 2/3/4 Input power: 24 Vdc, 8 mA	
	Digital Output	DO-A3	Outputs isolated type digital signal for monitoring drive run state (alarm signal, zero speed detection, etc.) Terminals: 6 photocoupler outputs (48 V, 50 mA or less) 2 relay contact outputs (250 Vac, 1 A or less 30 Vdc, 1 A or less)	
Communications	CANopen	SI-S3	Connects the drive to a CANopen network.	

Peripherals Devices

■ Braking Unit

Stand-alone

Braking Unit
【CDBR series】

Voltage	200 V Class			400 V Class		
Model：CDBR- ☐☐☐☐☐☐☐☐☐	2015B	2022B	2110B	4030B	4045B	4220B
Max. Applicable Motor (kW)	15	22	110	30	45	220
Max. Discharge Current A/10%ED (10 s max.)	40	60	250	40	60	250
Rated Discharge Current A/continues	15	20	80	15	18	80
Min. Connectable Resistance (Ω)	9.6	6.4	1.6	19.2	12.8	3.2
Drive Watts Loss (Heat loss) (W)	32	38	64	54	59	71

Dimensions (mm)

Model: CDBR-2015B, -2022B, -4030B, 4045B

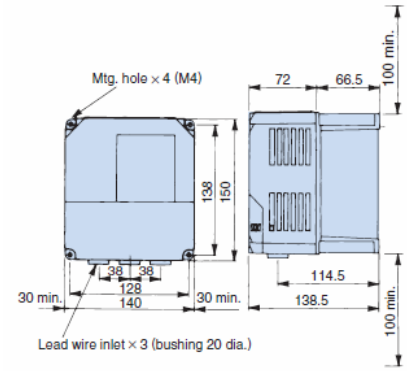

Weight: 1.8 kg

Model: CDBR-2110B

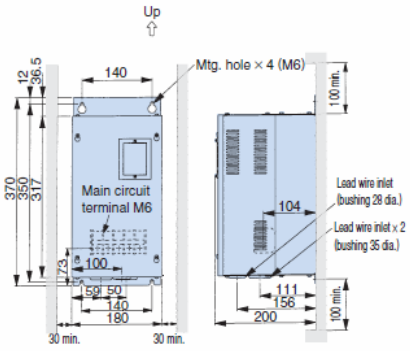

Weight: 8.5 kg

Model: CDBR-4220B

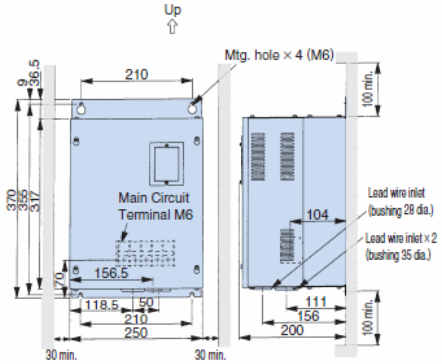

Weight: 12 kg

■ POWER REGENERATIVE UNIT VARISPEED-656RC5

200 V Class

Rated Capacity (kW)	3.7	5.5	7.5	11	15	18.5	22	30	37
Model CIMR-R5A☐☐☐☐	23P7	25P5	27P5	2011	2015	2018	2022	2030	2037

400 V Class

Rated Capacity (kW)	3.7	5.5	7.5	11	15	18.5	22	30	37	45	55	75
Model CIMR-R5A☐☐☐☐	43P7	45P5	47P5	4011	4015	4018	4022	4030	4037	4045	4055	4075

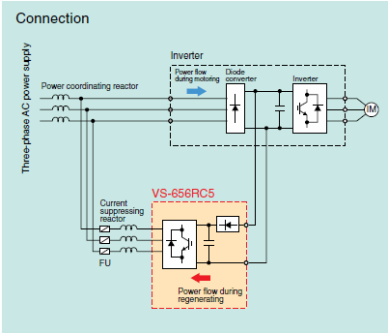

Refer to the catalog (No.KAE-S656-3) for details.

■ 24 V Power Supply

The 24 V Power Supply Option maintains drive control circuit power in the event of a main power outage.
The control circuit keeps the network communications and I/O data operational in the event of a power outage.

The installed option adds 50 mm to the total depth of the drive.

Weight: 0.2kg

50mm

Model	Code No.
200 V Class: PS-A10L	PS-A10L
400 V Class: PS-A10H	PS-A10H

Connection Diagram

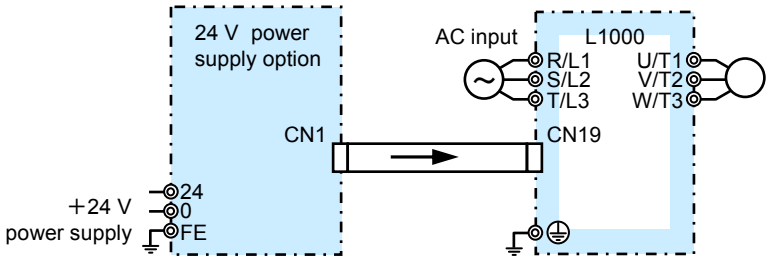

Note: Even if a back-up power supply is used for the control circuit, the main circuit must still have power in order to charge parameter settings.

■ DC Reactor (UZDA-B for DC circuit)

Base device selection on motor capacity.

Lead Wire Type

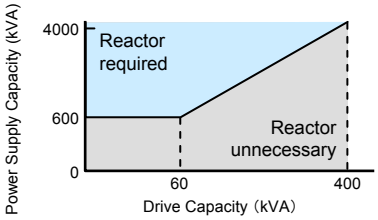

Note: Reactor recommended for power supplies larger than 600 kVA.

Connection Diagram

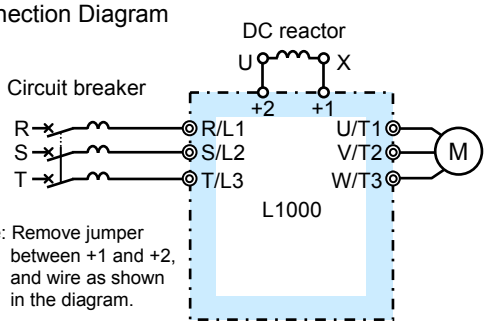

Note: Remove jumper between +1 and +2, and wire as shown in the diagram.

Dimensions (mm)

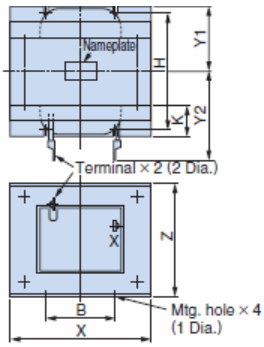

Figure 1

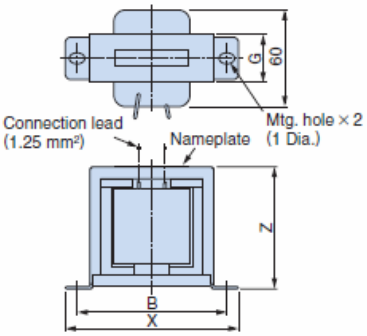

Figure 2

	Motor Capacity (kW)	Current (A)	Inductance (mH)	Code No.	Figure	Dimensions (mm)										Weight (kg)	Watt Loss (W)	Wire* Gauge (mm²)
						X	Y2	Y1	Z	B	H	K	G	ϕ1	ϕ2			
200 V Class	1.5	18	3	X010049	1	86	80	36	76	60	55	18	—	M4	M5	2	18	5.5
	2.2																	
	3.7																	
	5.5	36	1	X010050		105	90	46	93	64	80	26	—	M6	M6	3.2	22	8
	7.5																	
	11	72	0.5	X010051		105	105	56	93	64	100	26	—	M6	M8	4.9	29	30
	15																	
	18.5	90	0.4	X010176		133	120	52.5	117	86	80	25	—	M6	M8	6.5	45	30
	22～110	Built-in																

	Motor Capacity (kW)	Current (A)	Inductance (mH)	Code No.	Figure	Dimensions (mm)										Weight (kg)	Watt Loss (W)	Wire* Gauge (mm²)
						X	Y2	Y1	Z	B	H	K	G	ϕ1	ϕ2			
400 V Class	1.5	5.7	11	X010053	2	90	—	—	60	80	—	—	32	M4	—	1	11	2
	2.2																	
	3.7	12	6.3	X010054	1	86	80	36	76	60	55	18	—	M4	M5	2	16	2
	5.5	23	3.6	X010055		105	90	46	93	64	80	26	—	M6	M5	3.2	27	5.5
	7.5																	
	11	33	1.9	X010056		105	95	51	93	64	90	26	—	M6	M6	4	26	8
	15																	
	18.5	47	1.3	X010177		115	125	57.5	100	72	90	25	—	M6	M6	6	42	14
	22～110	Built-in																

∗Cable: Indoor PVC(75℃), ambient temperature 45℃, 3 lines max.

Terminal Type

Dimensions (mm)

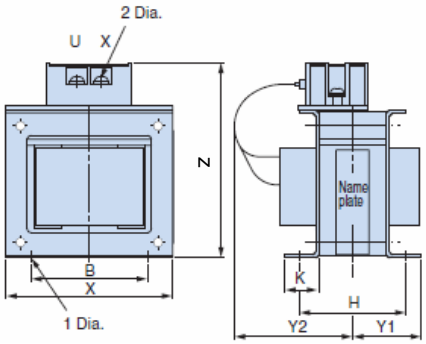

Figure 1

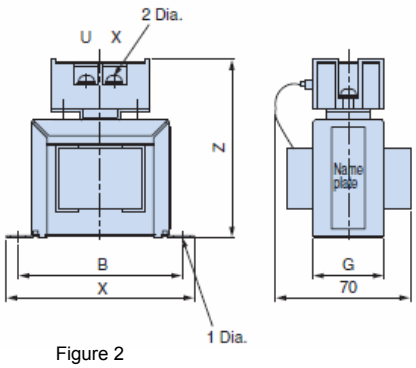

Figure 2

	Motor Capacity (kW)	Current (A)	Inductance (mH)	Code No.	Figure	Dimensions (mm)										Weight (kg)	Watt Loss (W)
						X	Y2	Y1	Z	B	H	K	G	ϕ1	ϕ2		
200 V Class	1.5	18	3	300-027-131	1	86	84	36	101	60	55	18	—	M4	M4	2	18
	2.2																
	3.7																
	5.5	36	1	300-027-132		105	94	46	129	64	80	26	—	M6	M4	3.2	22
	7.5																
	11	72	0.5	300-027-133		105	124	56	135	64	100	26	—	M6	M6	4.9	29
	15																
	18.5	90	0.4	300-027-139		133	147.5	52.5	160	86	80	25	—	M6	M6	6.5	44

	Motor Capacity (kW)	Current (A)	Inductance (mH)	Code No.	Figure	Dimensions (mm)										Weight (kg)	Watt Loss (W)
						X	Y2	Y1	Z	B	H	K	G	ϕ1	ϕ2		
400 V Class	1.5	5.7	11	300-027-135	2	90	—	—	88	80	—	—	32	M4	M4	1	11
	2.2																
	3.7	12	6.3	300-027-136	1	86	84	36	101	60	55	18	—	M4	M4	2	16
	5.5	23	3.6	300-027-137		105	104	46	118	64	80	26	—	M6	M4	3.2	27
	7.5																
	11	33	1.9	300-027-138		105	109	51	129	64	90	26	—	M6	M4	4	26
	15																
	18.5	47	1.3	300-027-140		115	142.5	57.5	136	72	90	25	—	M6	M5	5	42

■ Fuse and Fuse Holder

Install a fuse to the drive input terminals to prevent damage in case a fault occurs.
Refer to the instruction manual for information on UL-approved components.

【Fuji Electric FA Components & System Co., Ltd】

	Model CIMR-LT2A□	Fuse		Fuse Holder	
		Model	Qty.	Model	Qty.
200 V Class	0008	CR2LS-50	3	CM-1A	1
	0011				
	0018	CR2LS-100			
	0025	CR2L-125		CM-2A	1
	0033	CR2L-150			
	0047	CR2L-175			
	0060	CR2L-225		*	
	0075	CR2L-260			
	0085	CR2L-300			
	0115	CR2L-350			
	0145	CR2L-400			
	0180	CR2L-450			
	0215	CR2L-600			
	0283				
	0346				
	0415	CS5F-800			

	Model CIMR-LT4A□	Fuse		Fuse Holder	
		Model	Qty.	Model	Qty.
400 V Class	0005	CR6L-50	3	CMS-4	1
	0006				
	0009				
	0015	CR6L-75		CMS-5	1
	0018				
	0024	CR6L-100			
	0031	CR6L-150			
	0039				
	0045	CR6L-200		*	
	0060	CR6L-250			
	0075				
	0091	CR6L-300			
	0112	CR6L-350			
	0150	CR6L-400			
	0180	CS5F-600			
	0216				

∗ Manufacture does not recommended a specific fuse holder for this fuse.
Contact the manufacture for information on fuse dimensions.

L1000A

IRUMA BUSINESS CENTER (SOLUTION CENTER)
480, Kamifujisawa, Iruma, Saitama 358-8555, Japan
Phone: 81-4-2962-5696 Fax: 81-4-2962-6138

YASKAWA ELECTRIC CORPORATION
New Pier Takeshiba South Tower, 1-16-1, Kaigan, Minatoku, Tokyo, 105-6891, Japan
Phone: 81-3-5402-4511 Fax: 81-3-5402-4580
http://www.yaskawa.co.jp

YASKAWA ELECTRIC AMERICA, INC.
2121 Norman Drive South, Waukegan, IL 60085, U.S.A.
Phone: (800) YASKAWA (800-927-5292) or 1-847-887-7000 Fax: 1-847-887-7370
http://www.yaskawa.com

YASKAWA ELÉTRICO DO BRASIL COMÉRCIO LTDA.
Avenda Fagundes Filho, 620 Bairro Saude, Sao Paulo, SP04304-000, Brasil
Phone: 55-11-3585-1100 Fax: 55-11-5581-8795
http://www.yaskawa.com.br

YASKAWA ELECTRIC EUROPE GmbH
Hauptstraβe 185, 65760 Eschborn, Germany
Phone: 49-6196-569-300 Fax: 49-6196-569-398

YASKAWA ELECTRIC UK LTD.
1 Hunt Hill Orchardton Woods, Cumbernauld, G68 9LF, United Kingdom
Phone: 44-1236-735000 Fax: 44-1236-458182

YASKAWA ELECTRIC KOREA CORPORATION
7F, Doore Bldg. 24, Yeoido-dong, Youngdungpo-Ku, Seoul, 150-877, Korea
Phone: 82-2-784-7844 Fax: 82-2-784-8495

YASKAWA ELECTRIC (SINGAPORE) PTE. LTD.
151 Lorong Chuan, #04-02A, New Tech Park, 556741, Singapore
Phone: 65-6282-3003 Fax: 65-6289-3003

YASKAWA ELECTRIC (SHANGHAI) CO., LTD.
No.18 Xizang Zhong Road, Room 1702-1707, Harbour Ring Plaza, Shanghai, 200001, China
Phone: 86-21-5385-2200 Fax: 86-21-5385-3299

YASKAWA ELECTRIC (SHANGHAI) CO., LTD. BEIJING OFFICE
Room 1011A, Tower W3 Oriental Plaza, No.1 East Chang An Ave.,
Dong Cheng District, Beijing, 100738, China
Phone: 86-10-8518-4086 Fax: 86-10-8518-4082

YASKAWA ELECTRIC TAIWAN CORPORATION
9F, 16, Nanking E. Rd., Sec. 3, Taipei, Taiwan
Phone: 886-2-2502-5003 Fax: 886-2-2505-1280

YASKAWA ELECTRIC CORPORATION

YASKAWA

LITERATURE No.EZZ021066 ⟨5⟩
Published in Japan October 2009